ALEXANDRIA

PROPERTY RECORD CARD

021.00-03-24

VIRGINIA

TYPE & USE
100-199 RESIDENTIAL ✓
110 DETACHED ✓
111 SEMI-DET.
112 ROW
116 APT. - GARD.
117 APT. - HRS.
151 HOTELS
153 MOTELS
200-399 MFG.
400-499 UTILITIES
500-599 COMMERCIAL
530 SHOP CTR.
553 SERV. STA.
580 RESTAURANT
OFFICE BLDG.
600-699 SERVICES
637 WAREHOUSE
700-799 RECREATION
800-899 RAW PROD.
900-999 VACANT

DATA NO.	MAP NO.	BLK. NO.	LOT NO.	FIELD BK.
45320000	18	3947	6	

PROPERTY ADDRESS: 2208 N. Early St.

LEGAL DESCRIPTION	LOT SIZE
H. & L. 6, Blk. 2, Sec. 1, Brad LEe Homes	8000 #

ZONING	NAME OF TENANT	RENTS = MONTH - ANN.	GRM - G.I.M.
R-12			

RECORD OF OWNERSHIP	MAILING ADDRESS
Wood, Jas. Robt. or Esther	same

YR.	LAND	IMP.	ASSESSED VALUE
'72	4,400	10,700	15,100
74	5300	17400	22700
Review 74	5300	15000	20300
75	6300	15000	21300
76	—	—	—
77	13900	34500	48400
78	13900	38000	51900
79	15300	41900	57200
80	15300	56500	71800
81	15300	57600	72900
82	15300	63700	79000
83	—		
84	27500		

DEED BK. & PAGE	DATE	NOTES
PRICE:		
PRICE:		
PRICE:		
PRICE:		

PHOTO

REMARKS ✓

PROPERTY FACTORS

TOPOGRAPHY		UTILITIES		STREET IMP.		LOCATION	
LEVEL	✓	ALL UTILITIES	✓	PAVED	✓	STATIC	
HIGH		WATER		SEMI-PAVED		IMPROVING	✓
LOW		SEWER		DIRT		DECLINING	
ROLLING		GAS		PROPOSED		BLIGHTED	
SWAMPY				SIDEWALK	✓	CHANGING	
				CURB	✓		

LAND VALUE COMPUTATIONS AND SUMMARY

COMPARISON UNIT	UNIT PRICE	ADJUSTMENTS LOC.	SIZE	PHY.	UNIT VALUE	NO. UNITS	LAND VALUE
							10600

DATA NO.	MAP NO.	BLK. NO.	LOT NO.	FIELD BOOK	LAND VALUE	BLDG. VALUE	PURCH. PRICE	DATE

OCCUPANCY	TYPE & CONST.	SIZE	AREA	GRADE	AGE	EFF. AGE	COND.	REPL. VALUE	PHY. DEPR.	PHY. VALUE	FUNCT. DEPR.	LOC. ADJ.	ACT. VALUE
R-1	1S BR	43X25	1075	~~43~~ 3+	1959	1964	AUG	43682	.80				34900
						1968		37511	.80				30000

FOUNDATION

CONC. OR BRICK	
TILE OR CONC. BLK.	/
CONC. SLAB	
STONE	
PIERS	

BASEMENT

NO.	¼	½	¾	F

EXT. WALLS

SIDING ON SHEATHING	
SINGLE SIDING	
WOOD SHINGLES	
COMP. SHINGLES	
ALUMINUM SIDING	
STUCCO	
BRICK VENEER	/
STONE VENEER	
SOLID BRICK	
CONC. BLOCK	
METAL PANEL	
CLAPBOARD	

INSULATION

WALLS	CEIL.	FULL

ROOF TYPE

MANSARD		GABLE	/
GAMBREL		HIP	
FLAT		EXPAN.	

ROOFING

TILE		ASPHALT	/
SHAKES		ASBESTOS	
METAL		WOOD	
ROLL		SLATE	

ATTIC & BSM'T. FINISH

A	~~NONE~~			F
B	~~NONE~~			F

GAR. IN BSM'T.

1 CAR	NONE	2 CAR	

FLOORS

	B	1	2	3
EARTH				
CONCRETE	/			
PINE				
HARDWOOD		5		
VINYL TILE	2	1		
POURED TOR.				
CARPET/SUB.				

INTERIOR FINISH

PLASTER		6		
DRYWALL				
PANEL VEN.	2			
UNFIN.	1			

PARTITION

	B	1	2	3
NONE				
AVERAGE	/	/		
HEAVY				

KITCHEN EQUIP.

DWSH DISP OVEN RANGE FAN

FIREPLACES

	NO.
OPENINGS	/
CHIMNEYS	/

HEAT - AIR COND.

HOT AIR FORCED	/
HOT AIR GRAVITY	
HOT WATER OR VAPOR	
FLOOR FURNACE	
RADIANT	
BASEBOARD	
WALL UNITS	
CENT'L. AIR COND.	/
NO HEATING	

PLUMBING

4 FIXTURE BATH		
3 FIXTURE BATH	(1)	/
2 FIXTURE BATH		
EXTRA WATER CLOSET		
EXTRA SINK		
WATER ONLY		
NO PLUMBING		

TILING

BATH FLR. & WAIN.	(1)	/
BATH FLR. & SHW.		
BATH FLOOR	(1)	/

ROOMS

B	2	1	6
2		3	

CONDITION	G	F	P
INTERIOR		/	
EXTERIOR		/	
LAYOUT		/	

OUTBUILDINGS

	1	2	3
PIER FDTN.			
WALL FDTN.			
SLAB FDTN.			
SINGLE SIDING			
DOUBLE SIDING			
CONC. BLK.			
BRICK			
CONC. FLR.			
EARTH FLR.			
ROOF			
O.H. DOOR			
FIN. INT.			
ELECTRIC			
PLUMBING			

ATTACHED GARAGE

STY. HGT.	
BRICK VENEER	
FRAME	
FINISHED UP	

LISTED BY CHIT

MEASURED BY LEWIS

DATE 6-11-73

EST

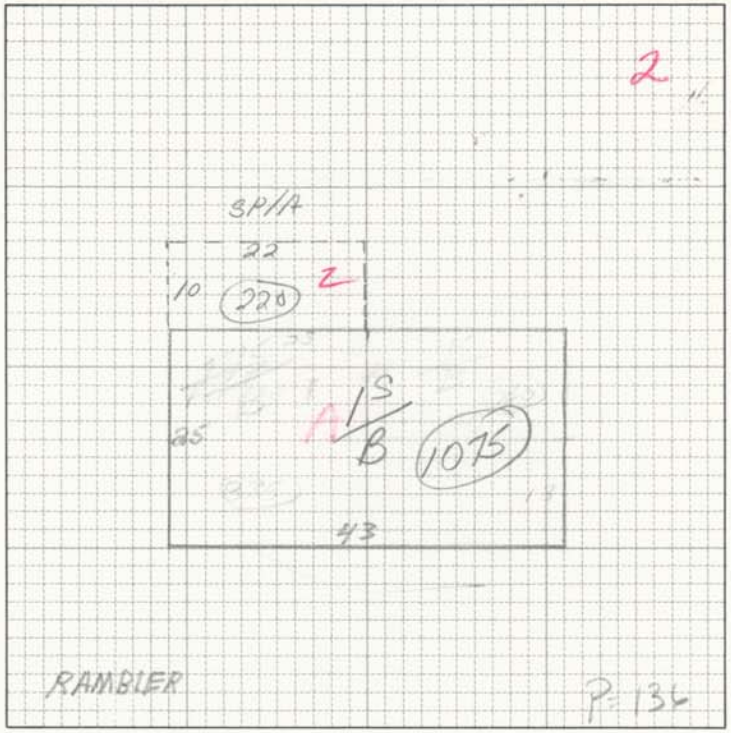

TOTAL BLDG. VALUE $

BUILDING COMPUTATION

ITEM	AREA OR QUAN.	UNIT COST	TOTAL
1S/BR	1075	27.87	29960
~~PLG.~~			~~900~~
A/C		1.00	1075
~~FIN BSMT~~	~~835~~	~~6.00~~	~~5010~~
~~PART~~	~~55 LF~~	~~18.90~~	~~1039~~
SP	220	2.20	1584

REMODELING AND ADDITIONS

REMODELING DATA	DETAIL	DATE	EST. COST	ADDED VALUE
KITCHEN				
BATH				
HEATING - A.C.				
EXTERIOR				

ADDITION DATA

PERMIT NO.	AMOUNT	PURPOSE	DATE	EST. COST	ADDED VALUE
31422		ALUM. SIDING (0)	5-15-75	$1086	

TOTAL		32619
FACTOR	.15 %	4892
REPLACEMENT VALUE		37511
LAND VALUE		10600
BUILDING VALUE		30000
PROPERTY VAL.	100%	40600

YR. UPDATED	LISTED BY	MEASURED BY	PRICED BY
6-15-78 BP	Talked to Mr. Wood No Changes		

NOTES

½ Bath - No - Review 11-26-74
No - Fin Bsm't

10x22 SP -

DATA NO.	MAP NO.	BLK. NO.	LOT NO.	FIELD BOOK	LAND VALUE	BLDG. VALUE	PURCH. PRICE	DATE

OCCUPANCY	TYPE & CONST.	SIZE	AREA	GRADE	AGE	EFF. AGE	COND.	REPL. VALUE	PHY. DEPR.	PHY. VALUE	FUNCT. DEPR.	LOC. ADJ.	ACT. VALUE
R-1	1S BR	43X25	1075	~~43~~ 3+	1959	1964	AUG	43682	.80				34900
						1968		37511	.80				30000

FOUNDATION

CONC. OR BRICK	
TILE OR CONC. BLK.	/
CONC. SLAB	
STONE	
PIERS	

BASEMENT

NO.	¼	½	¾	F

EXT. WALLS

SIDING ON SHEATHING	
SINGLE SIDING	
WOOD SHINGLES	
COMP. SHINGLES	
ALUMINUM SIDING	
STUCCO	
BRICK VENEER	/
STONE VENEER	
SOLID BRICK	
CONC. BLOCK	
METAL PANEL	
CLAPBOARD	

INSULATION

WALLS	CEIL.	FULL

ROOF TYPE

MANSARD		GABLE	/
GAMBREL		HIP	
FLAT		EXPAN.	

ROOFING

TILE		ASPHALT	/
SHAKES		ASBESTOS	
METAL		WOOD	
ROLL		SLATE	

ATTIC & BSM'T. FINISH

A	~~NONE~~			F
B	~~NONE~~			F

GAR. IN BSM'T.

1 CAR	NONE	2 CAR	

FLOORS

	B	1	2	3
EARTH				
CONCRETE	/			
PINE				
HARDWOOD		5		
VINYL TILE	2	1		
POURED TOR.				
CARPET/SUB.				

INTERIOR FINISH

PLASTER		6		
DRYWALL				
PANEL VEN.	2			
UNFIN.	1			

PARTITION

	B	1	2	3
NONE				
AVERAGE	/	/		
HEAVY				

KITCHEN EQUIP.

DWSH DISP OVEN RANGE FAN

FIREPLACES

	NO.
OPENINGS	/
CHIMNEYS	/

HEAT - AIR COND.

HOT AIR FORCED	/
HOT AIR GRAVITY	
HOT WATER OR VAPOR	
FLOOR FURNACE	
RADIANT	
BASEBOARD	
WALL UNITS	
CENT'L. AIR COND.	/
NO HEATING	

PLUMBING

4 FIXTURE BATH		
3 FIXTURE BATH	(1)	/
2 FIXTURE BATH		
EXTRA WATER CLOSET		
EXTRA SINK		
WATER ONLY		
NO PLUMBING		

TILING

BATH FLR. & WAIN.	(1)	/
BATH FLR. & SHW.		
BATH FLOOR	(1)	/

ROOMS

B	2	1	6
2		3	

CONDITION	G	F	P
INTERIOR		/	
EXTERIOR		/	
LAYOUT		/	

OUTBUILDINGS

	1	2	3
PIER FDTN.			
WALL FDTN.			
SLAB FDTN.			
SINGLE SIDING			
DOUBLE SIDING			
CONC. BLK.			
BRICK			
CONC. FLR.			
EARTH FLR.			
ROOF			
O.H. DOOR			
FIN. INT.			
ELECTRIC			
PLUMBING			

ATTACHED GARAGE

STY. HGT.	
BRICK VENEER	
FRAME	
FINISHED UP	

LISTED BY CHIT

MEASURED BY LEWIS

DATE 6-11-73

EST

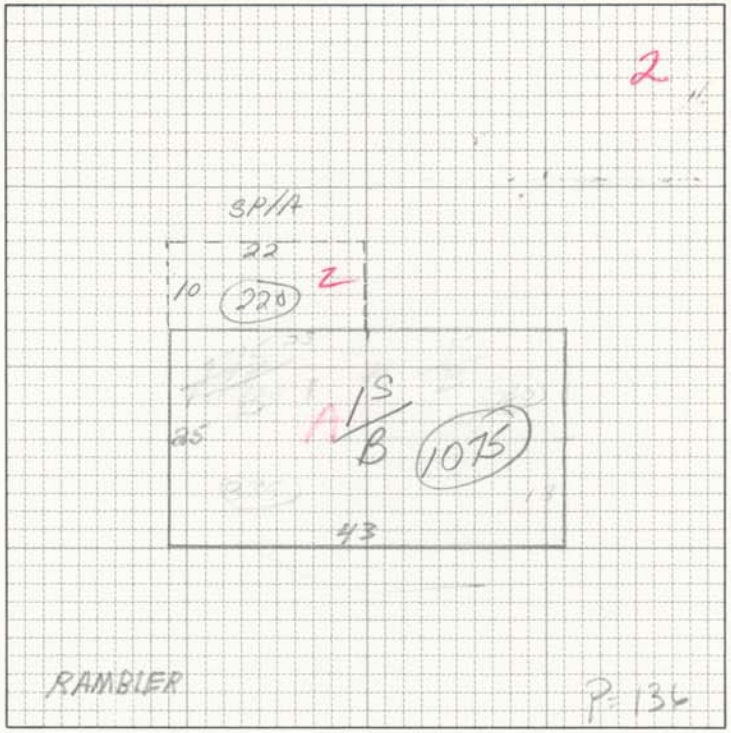

TOTAL BLDG. VALUE $

BUILDING COMPUTATION

ITEM	AREA OR QUAN.	UNIT COST	TOTAL
1S/BR	1075	27.87	29960
~~PLG.~~			~~900~~
A/C		1.00	1075
~~FIN BSMT~~	~~835~~	~~6.00~~	~~5010~~
~~PART~~	~~55 LF~~	~~18.90~~	~~1039~~
SP	220	2.20	1584

REMODELING AND ADDITIONS

REMODELING DATA	DETAIL	DATE	EST. COST	ADDED VALUE
KITCHEN				
BATH				
HEATING - A.C.				
EXTERIOR				

ADDITION DATA

PERMIT NO.	AMOUNT	PURPOSE	DATE	EST. COST	ADDED VALUE
31422		ALUM. SIDING (0)	5-15-75	$1086	

TOTAL		32619
FACTOR	.15 %	4892
REPLACEMENT VALUE		37511
LAND VALUE		10600
BUILDING VALUE		30000
PROPERTY VAL.	100%	40600

YR. UPDATED	LISTED BY	MEASURED BY	PRICED BY
6-15-78 BP	Talked to Mr. Wood No Changes		

NOTES

½ Bath - No - Review 11-26-74
No - Fin Bsm't

10x22 SP -